J1, J2 CONNECTORS	TERMINAL BLOCK PLUGS	COVER SCREWS INCLUDED	TERMINAL PLUGS INCLUDED
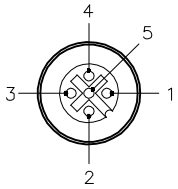	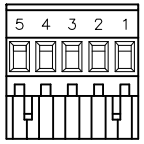	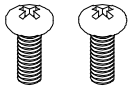 FORM 8 CONDUIT BODIES: 10–24 SCREWS 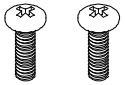 MARK 9 CONDUIT BODIES: 8–32 SCREWS	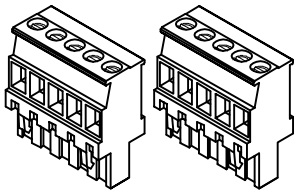

SPECIFICATIONS	
HOUSING MATERIAL/COLOR	NYLON 66 – 33% GLASS FILLED/BLACK
RECEPTACLE HOUSING MATERIAL/PLATING	BRASS/NICKEL
CONTACT CARRIER MATERIAL	TPU/BLACK
CONTACT MATERIAL/PLATING	BRASS/GOLD
OPERATING VOLTAGE	250 V
OPERATING CURRENT	4.0 A PER CONDUCTOR
PROTECTION CLASS to DIN 40050	IP 67 – ONLY WHEN ALL RECEPTACLES ARE COVERED WITH PLUGS OR CONNECTED
OPERATING TEMPERATURE	−30°C to +80°C (−22°F to +176°F)

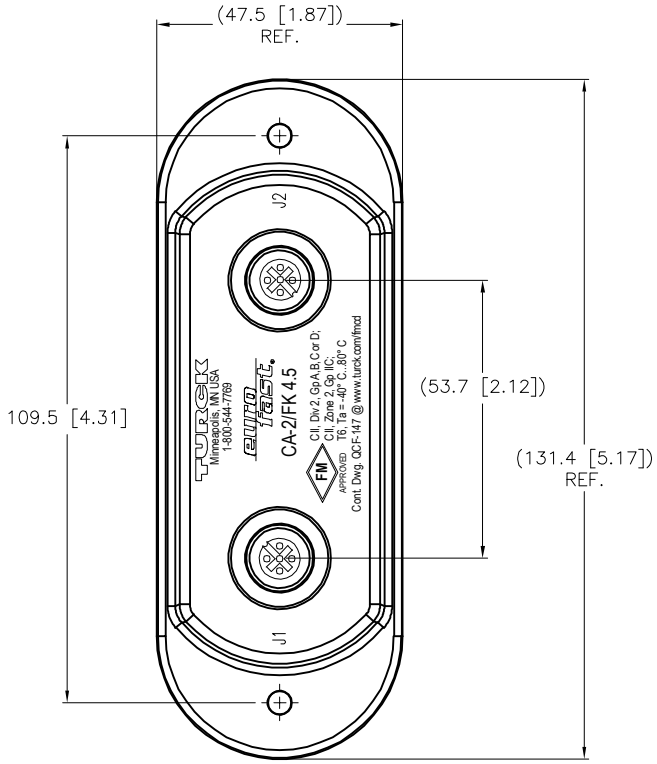

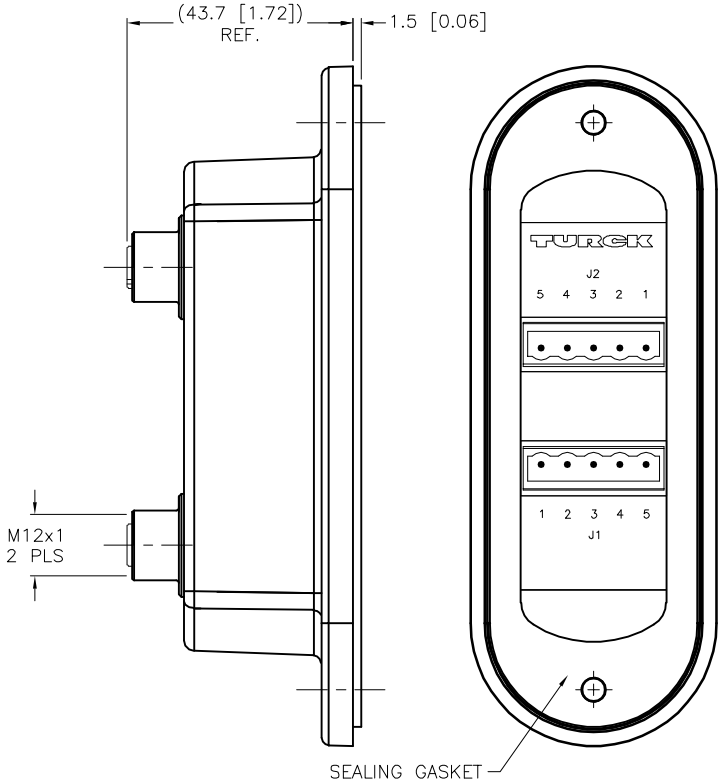

WIRING DIAGRAM

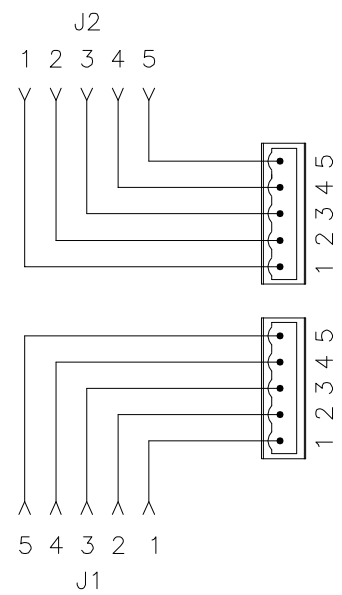

SOURCE DRAWING - FOR REFERENCE ONLY

RELATED DOCUMENTS	3RD ANGLE PROJECTION	THIS DRAWING IS CONFIDENTIAL AND THE PROPERTY OF TURCK INC. USE OF THIS DOCUMENT WITHOUT WRITTEN PERMISSION IS PROHIBITED.	TURCK	3000 CAMPUS DRIVE MINNEAPOLIS, MN 55441 1-800-544-7769 (763) 553-7300 (763) 553-0708 fax www.turck.us
1. 2. 3. 4.				
MATERIAL: SEE SPECIFICATIONS	ALL DIMENSIONS DISPLAYED ON THIS DRAWING ARE FOR REFERENCE ONLY	DRFT DD / DATE 07/03/03	DESCRIPTION: CA–2/FK 4.5	
		APVD DD / SCALE 1=1.5		
FINISH: SEE SPECIFICATIONS	CONTACT TURCK FOR MORE INFORMATION	UNIT OF MEASUREMENT: **MILLIMETER [INCH]**	IDENTIFICATION NO.: U0926–60	REV: F
		DO NOT SCALE THIS DRAWING	FILE: U0926–60	SHEET 1 OF 1

REV	DESCRIPTION	BY	DATE	ECO NO.
F	ADD FM APPROVAL TO CLICHE	RDS	01/27/22	500000005140

Approved 01/28/2022, work order #245364 by J.S.